MABEL - Transmission Dynamics

Koushil Sreenath Hae-Won Park J.W. Grizzle
Benjamin Morris Jonathan Hurst

Electrical Engineering and Computer Science Department
University of Michigan
1301 Beal Avenue
Ann Arbor, MI 48109-2122, USA.

February 19, 2009.

1 Introduction

This document briefly describes the transmission dynamics of **MABEL**. The matlab file that accompanies this document provides means of symbolically computing the equations describing the transmission dynamics.

2 Constraints that define Differentials

The transmission for **MABEL** consists of there separate cable drive differentials. The following equations below describe the constraints imposed by the differentials.

Thigh Differential

$$r_{A_{thigh}}\theta_{A_{thigh}} + r_{B_{thigh}}\theta_{B_{thigh}} - \left(r_{A_{thigh}} + r_{B_{thigh}}\right)\theta_{C_{thigh}} = 0 \quad (1)$$

$$\theta_{A_{thigh}} - \theta_{B_{thigh}} + r_{D_{thigh}}\left(1/r_{A_{thigh}} + 1/r_{B_{thigh}}\right)\theta_{D_{thigh}} = 0 \quad (2)$$

Shin Differential

$$r_{A_{shin}}\theta_{A_{shin}} + r_{B_{shin}}\theta_{B_{shin}} - \left(r_{A_{shin}} + r_{B_{shin}}\right)\theta_{C_{shin}} = 0 \quad (3)$$

$$\theta_{A_{shin}} - \theta_{B_{shin}} + r_{D_{shin}}\left(1/r_{A_{shin}} + 1/r_{B_{shin}}\right)\theta_{D_{shin}} = 0 \quad (4)$$

Spring Differential

$$r_{A_{spring}}\theta_{A_{spring}} + r_{B_{spring}}\theta_{B_{spring}} - \left(r_{A_{spring}} + r_{B_{spring}}\right)\theta_{C_{spring}} = 0 \quad (5)$$

$$\theta_{A_{spring}} - \theta_{B_{spring}} + r_{D_{spring}}\left(1/r_{A_{spring}} + 1/r_{B_{spring}}\right)\theta_{D_{spring}} = 0 \quad (6)$$

3 Constraints that define the Interconnection of Differentials

The equations below define the interconnections between the pulleys of the different differentials to form the leg transmission. Figure 1 depicts these equations pictorially.

$$
\begin{aligned}
\theta_{B_{thigh}} - \theta_{B_{shin}} &= 0 \quad (ConInt1) \\
r_{C_{spring}}\theta_{C_{spring}} + r_{A_{shin}}\theta_{A_{shin}} &= 0 \quad (ConInt2) \\
r_{C_{spring}}\theta_{C_{spring}} - r_{A_{thigh}}\theta_{A_{thigh}} &= 0 \quad (ConInt3) \\
r^{small}_{MLA_stepdown}\theta_{MLA_stepdown} + r_{B_{thigh}}\theta_{B_{thigh}} &= 0 \quad (ConInt4) \\
r_{MLA}q_{MLA} - r^{big}_{MLA_stepdown}\theta_{MLA_stepdown} &= 0 \quad (ConInt5) \\
r^{small}_{MLS_stepdown}\theta_{MLS_stepdown} + r_{A_{spring}}\theta_{A_{spring}} &= 0 \quad (ConInt6) \\
r_{MLS}q_{MLS} + r^{big}_{MLS_stepdown}\theta_{MLS_stepdown} &= 0 \quad (ConInt7) \\
q_{LS} + \left(\theta_{C_{shin}} - \theta_{C_{thigh}}\right)/2 &= 0 \quad (ConInt8) \\
q_{LA} - \left(\theta_{C_{shin}} + \theta_{C_{thigh}}\right)/2 &= 0 \quad (ConInt9)
\end{aligned}
$$

Figure 2 illustrates the complete mechanical cable drive transmission mechanism for one leg.

4 Using the matlab code

To obtain the symbolic transmission dynamics, call the function `transmission_model()` using the following command:

```
[KE,  PE, THETA_MLA, THETA_MLS, THETA_KNEE, THETA_DTHIGH,
      THETA_BSPRING, THETA_MLA_STEPDOWN, THETA_LS, THETA_LA,
      THETA_TOR] = transmission_model() ;
```

This will generate the sybolic equations for kinetic and potential energies of the transmission. The leg angle, q_{LA}, the leg shape angle, q_{LS}, and the spring angle, q_{Bsp}, are choosen by default as independent coordinates. For a different choice of independent coordinates, or to derive a model without the spring, refer to the documentation for the input parameters of the function `transmission_model()`.

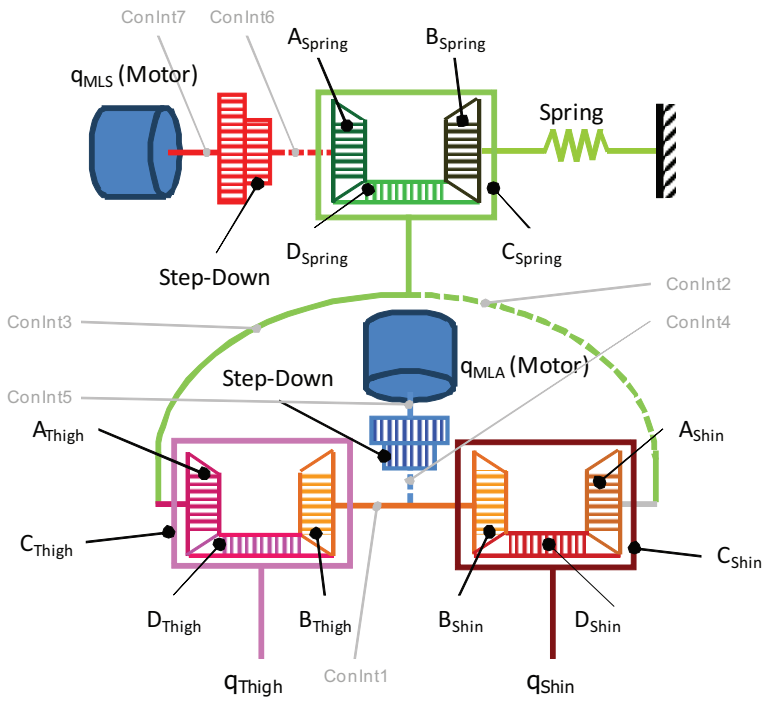

Figure 1: Conceptual rendering of the transmission mechanism. The lines between the differentials indicate cable connections. Dotted lines indicate that the corresponding pulleys are cabled to rotate in opposite directions. Interconnection constraints are indicated by the corresponding equation numbers.

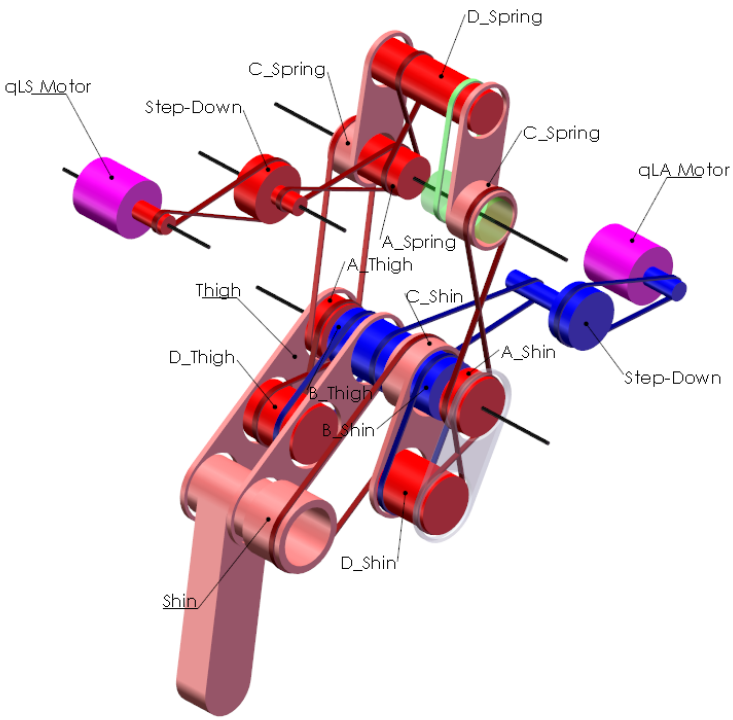

Figure 2: Cable drive transmission for one leg. Two motors (qLA, qLS), and three differentials (Thigh, Shin and Spring) are illustrated. A,B,C,D refer to the pulleys of respective differential.